To V.I.Arnold

on the occasion of his 60-th birthday

CONNECTED COMPONENTS IN THE INTERSECTION OF TWO OPEN OPPOSITE SCHUBERT CELLS IN $SL_n(\mathbb{R})/B$

B. Shapiro[‡], M. Shapiro[*] and A. Vainshtein[†,1]

[‡] Department of Mathematics, University of Stockholm
S-10691, Sweden, shapiro@matematik.su.se
[*] Department of Mathematics, Royal Institute of Technology
S-10044, Sweden, mshapiro@math.kth.se
[†] Dept. of Mathematics and Computer Science, University of Haifa
Mount Carmel, 31905 Haifa, Israel, alek@mathcs11.haifa.ac.il

Abstract. In this paper we reduce the problem concerning the number of connected components in the intersection of two real opposite open Schubert cells in $SL_n(\mathbb{R})/B$ to a purely combinatorial question in the space of upper triangular matrices with $\mathbb{F}_2$-valued entries. The crucial step of the reduction uses the parametrization of the space of real unipotent totally positive upper triangular matrices introduced in [L] and [BFZ].

§1. Introduction and results

For more than hundred years Schubert decomposition of complete and partial flag manifolds and Schubert calculus has been an intertwining point of algebra, geometry, representation theory and combinatorics. In this paper we are concerned with the further refinement of Schubert decomposition theory.

Our far and ambitious goal is to describe the topology of intersection of two arbitrary Schubert cells. This problem seems to be very important in connection with representation theory, in particular, with calculation

of Kazhdan–Lusztig polynomials, which is known to be a very hard problem.

As a minor step in this direction we calculate in this paper the number of connected components in the intersection of two open opposite Schubert cells in the space of real n-dimensional flags. This question was raised in [A], and later, in connection with criteria

1991 *Mathematics Subject Classification.* Primary 14M15, Secondary 14N10, 14P25.
[1]The research of this author was supported by the Rashi Foundation.

of total positivity, in [SS]. Other topological characteristics of pairwise intersections of Schubert cells (not neccessary opposite) are considered in our previous papers [SV, SSV1, SSV2].

Despite the fact that in this paper we consider only real algebraic varieties, we hope that our approach can give some information about complex geometry as well. The reasons for this hope are as follows.

a) The calculation method is based on the beautiful and very deep ("very algebraic") results by Berenstein, Fomin and Zelevinsky [BFZ] on the Lusztig parametrization of the unipotent lower triangular matrices, which form an open cell in the flag manifold. It looks like the same type of parametrization and cell decompositions might be used also for calculation of certain topological characteristics (e.g., the fundamental group) in the complex case.

b) Any real algebraic manifold satisfies the so-called Smith inequality: the sum of its Betti numbers for homology with $\mathbb{F}_2$-coefficients is less or equal than the sum of Betti numbers of its complexification with $\mathbb{Z}$-coefficients. By the results of one of the authors (see [S]), the intersection of opposite open cells in the space of complete flags enjoys the so-called M-property, i.e., the Smith inequality becomes an equality. It is another indirect hint that real and complex geometries of this intersection are related very closely.

Recall that a real flag f is a sequence of n linear subspaces $\{f^1 \subset f^2 \subset \cdots \subset f^{n-1} \subset f^n = \mathbb{R}^n\}$, where $\dim f^k = k$. We denote the set of all real flags by F_n. In an obvious way one can identify F_n with the set $SL_n(\mathbb{R})/B$, where B is the Borel subgroup of all upper triangular matrices. Indeed, fix coordinates in $\mathbb{R}^n$. Then any nondegenerate matrix produces a flag whose i-dimensional subspace is generated by the first i columns of the matrix.

Two flags f and g are called transversal if all linear subspaces of f are transversal to all subspaces of g, i.e., for any pair $1 \leqslant i, j \leqslant n$

$$\dim(f^i \cap g^j) = \begin{cases} i+j-n, & \text{if } i+j \geqslant n, \\ 0, & \text{otherwise.} \end{cases}$$

Let us choose a pair of transversal flags f and g. The main object of our interest is the set $U^n_{f,g}$ of all flags transversal to both f and g. Evidently, $U^n_{f,g}$ is the intersection of open maximal Schubert cells in Schubert decompositions of the variety of complete real flags $SL_n(\mathbb{R})/B$ with respect to the flags f and g. Since the group $SL_n(\mathbb{R})$ acts transitively on pairs of transversal flags, all $U^n_{f,g}$ are diffeomorphic. We thus omit the indices f and g and write just U^n.

Let us now use the isomorphism $F_n \cong SL_n(\mathbb{R})/B$ to introduce coordinates in F_n (and, in particular, in U^n). Denote by $\{e_1, \ldots, e_n\}$ the standard basis in $\mathbb{R}^n$ and take for f the flag spanned by $\{e_1\}, \{e_1, e_2\}, \ldots$, and for g the flag spanned by $\{e_n\}, \{e_n, e_{n-1}\}, \ldots$. Then the open Schubert cell of all flags transversal to g is identified naturally with the set of all lower triangular unipotent matrices; namely, the ith subspace of a variable flag is spanned by the first i columns of the matrix.

In order to make our notation consistent with that of [BFZ] we transpose lower triangular matrices and parametrize flags transversal to g with the set N^n of all upper triangular unipotent matrices.

Flags transversal to both f and g are described in the following way. Let $\mathfrak{l}$ be an arbitrary subset of $\{1, 2, \ldots, n\}$, and $D_{\mathfrak{l}}$ be the determinant of the submatrix formed by the first $|\mathfrak{l}|$ rows and the columns numbered by the elements of $\mathfrak{l}$; we write D_k instead of $D_{\{n-k+1, n-k+2, \ldots, n\}}$. The set of all flags transversal to both f and g corresponds to the set of all upper triangular matrices satisfying the additional restriction $D_i \neq 0$ for all $i = 1, \ldots, n-1$ (see [SV] for details). Let us denote by Δ_i the divisor $\{D_i = 0\} \subset N^n$, and by Δ^n the union $\cup_{i=1}^{n-1} \Delta_i$. We thus see that U^n is diffeomorphic to the complement $N^n \setminus \Delta^n$.

The main result of the present paper is a reduction of the topological problem of finding the number of connected components in the intersection of two open opposite Schubert cells to a purely combinatorial problem of enumerating the orbits of a certain linear group action in the vector space of upper triangular matrices with $\mathbb{F}_2$-entries.

This combinatorial reduction consists of two steps. The first one seems very natural and was obtained independently by K.Rietsch in a more general situation (for the case of A- and D-series). It leads to a combinatorial problem of enumerating the connected components of a certain graph, see [R] and §2. The second step allows to decrease significantly the cardinality of the graph considered and, finally, leads to a $\mathbb{F}_2$-linear group action.

The resulting reduction of the initial problem to the group action can be generalized in a natural way to the case when the initial flags f and g are not in general position. Presumably, the number of orbits of this generalized group action coincides with the number of connected components in $U^n_{f,g}$ for any relative position of f and g. Strangely enough, the first step of the reduction does not generalize directly to the case of an arbitrary pair (f, g). Apparently, there exists a deeper connection between the initial problem and the group action than the one known to the authors for the present moment, see Final Remarks.

Let us formulate the main result of our paper. Consider the vector space $N^n(\mathbb{F}_2)$ of upper triangular matrices with $\mathbb{F}_2$-valued entries. We define the group $\mathfrak{G}_n$ as the subgroup of $GL(N^n(\mathbb{F}_2))$ generated by $\mathbb{F}_2$-linear transformations g_{ij}, $1 \leqslant i \leqslant j \leqslant n-1$. The generator g_{ij} acts on a matrix $M \in N^n(\mathbb{F}_2)$ as follows. Let M^{ij} denote the 2×2 minor of M formed by rows i and $i+1$ and columns j and $j+1$ (or its upper triangle in case $i = j$). Then g_{ij} applied to M changes M^{ij} by adding to each entry of M^{ij} the $\mathbb{F}_2$-valued trace of M^{ij}, and does not change all the other entries of M. For example, if $i < j$ and $M^{ij} = \begin{pmatrix} a & b \\ c & d \end{pmatrix}$, then g_{ij} changes M^{ij} as follows:

$$\begin{pmatrix} a & b \\ c & d \end{pmatrix} \mapsto \begin{pmatrix} d & b+a+d \\ c+a+d & a \end{pmatrix}.$$

Observe that each g_{ij} is an involution on $N^n(\mathbb{F}_2)$. Some other properties of $\mathfrak{G}_n$ are given in Final Remarks. Apparently, an explicit description of $\mathfrak{G}_n$ can be derived from the above mentioned properties and the classification contained in [J1]. The most essential result relating the properties of G_n to our initial question is as follows.

Main Theorem. *The number $\sharp_n$ of connected components in U^n coincides with the number of $\mathfrak{G}_{n-1}$-orbits in $N^{n-1}(\mathbb{F}_2)$.*

The main conjecture, which is based on our computer experiments and a detailed study of the $\mathfrak{G}_n$-action, is as follows.

Main Conjecture. *The number $\sharp_n$ of connected components in U^n equals $3 \times 2^{n-1}$ for all $n > 5$.*

Cases $n = 3, 4$ or 5 are exceptional, with $\sharp_3 = 6$, $\sharp_4 = 20$, $\sharp_5 = 52$.

The structure of the paper is as follows. In §2 we recall some basic constructions of [L] and [BFZ] and get the first combinatorial reduction of the problem. Section §3 is central in the paper. Here we describe the second combinatorial reduction and prove that it is consistent.

We are very grateful to A. Zelevinsky for a number of stimulating discussions and encouragement, and to K. Rietsch who (after the talk on the topic given by B. Shapiro at the Northeastern University) provided us with a copy of her unpublished paper [R]. B. Shapiro and A. Vainshtein express their gratitude to Volkswagen-Stiftung for the financial support of their stay at MFO in Oberwolfach (under the program "Research in Pairs"), where an essential progress in the proof of the above main conjecture was achieved.

§2. Chamber ansatz and the first combinatorial reduction

2.1. Significant recent papers [L] and [BFZ] have shown the importance of the following parametrization of the set $N^n_{>0}$ of totally positive real upper triangular $n \times n$ matrices. In particular, it implies a number of interesting results on canonical bases of quantum groups, as well as new criteria of total positivity. Namely, denote by w_0^n the permutation of the maximal length in the symmetric group S_n and fix some reduced decomposition $w_0^n = s_{i_1} \dots s_{i_m}$, where s_{i_j} stands for the transposition $(i_j, i_j + 1)$, $1 \leqslant i_j \leqslant n-1$, $m = n(n-1)/2$. Following G. Lusztig, one can factorize any matrix $\mathcal{M} \in N^n_{>0}$ into the product

$$\mathcal{M} = (\mathbb{1} + t_1 \cdot E_{s_{i_1}})(\mathbb{1} + t_2 \cdot E_{s_{i_2}}) \times \dots \times (\mathbb{1} + t_m \cdot E_{s_{i_m}}), \tag{1}$$

where $E_{s_{i_l}}$ is the matrix with the only nonvanishing entry $e_{s_{i_l}, s_{i_l}+1} = 1$, and all t_l, $l = 1, \dots, m$, are positive.

The right hand side of the above formula yields a well-defined mapping $L_\sigma \colon \mathbb{R}^m \to N^n$, where σ stands for the reduced decomposition of w_0^n chosen above.

A. Berenstein, S. Fomin and A. Zelevinsky have derived the formulas for the parameters $\{t_l\}$ in terms of the matrix entries of $\mathcal{M}$. Using their formulas, or directly, one can get the following expressions for $D_i(\mathcal{M})$, which hold true for any reduced decomposition σ:

$$\begin{aligned} D_1(\mathcal{M}) &= t_1 \cdot \dots \cdot t_n, \\ D_2(\mathcal{M}) &= t_2 \cdot \dots \cdot t_n \cdot t_{n+1} \cdot \dots \cdot t_{2n-1}, \\ &\dots \\ D_{n-1}(\mathcal{M}) &= \prod_{i=1}^{n-1} t_{kn - \frac{k(k+1)}{2}}. \end{aligned}$$

Observe that each D_i is a monomial in $\{t_i\}$. Therefore, if $t_i \neq 0$ for all $i = 1, \dots, m$, then all the D_i do not vanish. Thus, the image $\mathcal{U}_\sigma$ of the map $L_\sigma \colon (\mathbb{R} \setminus 0)^m \to N^n$ for any reduced decomposition σ of w_0^n lies in U^n. In fact, the explicit expressions for $\{t_l\}$ imply the following proposition.

Proposition. *L_σ is a diffeomorphism of $(\mathbb{R}\setminus 0)^m$ onto its image $\mathcal{U}_\sigma \subset U^n$.*

Denote by C_σ the complement to $\mathcal{U}_\sigma$ in U^n, and let Σ^n denote the set of all reduced decompositions of w_0^n.

2.2. Lemma. *The codimension of $\bigcap_{\sigma\in\Sigma^n} C_\sigma$ in U^n is at least 2.*

Proof. To prove the claim it suffices to find two reduced decompositions σ and τ such that the codimension of $C_\sigma \cap C_\tau$ is already at least 2. It follows from [BFZ] that C_σ for any $\sigma \in \Sigma^n$ is represented as the union of irreducible divisors given by equations $M_{\mathfrak{l}} = 0$, where the index $\mathfrak{l}$ runs over a certain subset $\mathfrak{L}_\sigma$ of increasing subsequences of $\{1, 2, \dots, n\}$. The explicit expression for $M_{\mathfrak{l}}$ is given by the so-called Chamber Ansatz of [BFZ]. Namely, let $\mathcal{M}$ be an $n \times n$ matrix and $[\mathcal{M}]_+$ denote the last factor $\mathcal{M}_2$ in the Gaussian LDU-decomposition $\mathcal{M} = \mathcal{M}_1^T \mathcal{D} \mathcal{M}_2$, where $\mathcal{M}_1, \mathcal{M}_2 \in N^n$ and $\mathcal{D}$ is diagonal. Then $M_{\mathfrak{l}}(\mathcal{M}) = D_{\mathfrak{l}}(\mathcal{N})$, where $\mathcal{M} = [w_0^n \mathcal{N}^T]_+$.

Let us fix $\sigma = s_1 s_2 \dots s_{n-1} s_1 s_2 \dots s_{n-2} \dots s_1 s_2 s_1$ and $\tau = s_{n-1} s_{n-2} \dots s_1 s_{n-1} s_{n-2} \dots s_2 \dots s_{n-1} s_{n-2} s_{n-1}$. It follows from the Chamber Ansatz that

$$\begin{aligned}
\mathfrak{L}_\sigma &= \{\{r, r+1, \dots, q\} : 1 < r < q < n\},\\
\mathfrak{L}_\tau &= \{\{1, 2, \dots, s\} \cup \{p, p+1, \dots, n-1\} : 0 < s < p < n\},
\end{aligned}$$

and thus $\mathfrak{L}_\sigma \cap \mathfrak{L}_\tau = \varnothing$.

Consider a matrix $\mathcal{M}$ of the form

$$\mathcal{M} = \begin{pmatrix}
1 & * & * & * & \dots & * & 1\\
0 & 1 & * & * & \dots & * & 0\\
0 & 0 & 1 & * & \dots & * & 0\\
\vdots & & & & \ddots & & \vdots\\
0 & 0 & 0 & 0 & \dots & 1 & 0\\
0 & 0 & 0 & 0 & \dots & 0 & 1
\end{pmatrix}.$$

It is easy to check that for a generic $\mathcal{M}$ one has $M_{\mathfrak{l}}(\mathcal{M}) = 0$ for any $\mathfrak{l} \in \mathfrak{L}_\sigma$, but $M_{\mathfrak{l}}(\mathcal{M}) \neq 0$ for $\mathfrak{l} \in \mathfrak{L}_\tau$. Since the divisors $M_{\mathfrak{l}} = 0$ are irreducible for all $\mathfrak{l} \in \mathfrak{L}_\sigma \cup \mathfrak{L}_\tau$, we thus get $\operatorname{codim} C_\sigma \cap C_\tau \geqslant 2$. $\square$

2.3. Corollary. *The number $\sharp_n$ is equal to the number of connected components of $\cup_{\sigma\in\Sigma^n} \mathcal{U}_\sigma$.*

Proof. The number of connected components does not change if we delete a subset of codimension $\geqslant 2$. $\square$

2.4. Transition rules. The coefficients $\{t_i\}$ of factorization (1) depend on the choice of the reduced decomposition σ. The corresponding transition formulas, borrowed from [BFZ], are given below. All reduced decompositions can be obtained from each other by a sequence of the so-called 2- and 3-moves. A 2-*move* is the interchange of neighboring s_{i_k} and $s_{i_{k+1}}$ in the decomposition under the assumption that they commute, and a 3-*move* is the substitution of $s_{j+1} s_j s_{j+1}$ instead of $s_j s_{j+1} s_j$.

The transition formulas for the 2-move at the positions $(i, i+1)$ are as follows:

$$\begin{aligned} t'_i &= t_{i+1}, \\ t'_{i+1} &= t_i. \end{aligned} \tag{2}$$

The transition formulas for the 3-move at the positions $(i, i+1, i+2)$ are more complicated:

$$\begin{aligned} t'_i &= \frac{t_{i+1}t_{i+2}}{t_i + t_{i+2}}, \\ t'_{i+1} &= t_i + t_{i+2}, \\ t'_{i+2} &= \frac{t_{i+1}t_i}{t_i + t_{i+2}}. \end{aligned} \tag{3}$$

2.5. Sign transition rules. Let $\varkappa_i$ stand for the sign of t_i, that is, $\varkappa_i \in \{+, -\}$ (we assume that t_i does not vanish). Below we formulate transition rules for $\{\varkappa_i\}$ under any 2- or 3-move.

For any 2-move, the new signs are defined uniquely from (2):

$$\begin{aligned} \varkappa'_i &= \varkappa_{i+1}, \\ \varkappa'_{i+1} &= \varkappa_i. \end{aligned} \tag{4}$$

For 3-moves, there are two different possibilities:

1) in the following cases the new signs are defined uniquely from (3):

$$\begin{array}{ccccccc} (\varkappa'_i & \varkappa'_{i+1} & \varkappa'_{i+2}) & \leftrightarrow & (\varkappa_i & \varkappa_{i+1} & \varkappa_{i+2}) \\ (+ & + & +) & \leftrightarrow & (+ & + & +) \\ (- & - & -) & \leftrightarrow & (- & - & -) \\ (+ & - & +) & \leftrightarrow & (- & + & -) \\ (- & + & -) & \leftrightarrow & (+ & - & +) \end{array} ; \tag{5}$$

2) for all the other cases, the changes of signs are given in the following table:

$$\begin{array}{ccccccc} (\varkappa'_i & \varkappa'_{i+1} & \varkappa'_{i+2}) & \leftrightarrow & (\varkappa_i & \varkappa_{i+1} & \varkappa_{i+2}) \\ & & & & (+ & - & -) \\ (+ & + & -) & \leftrightarrow & & \text{or} & \\ & & & & (- & + & +); \\ & & & & (+ & - & -) \\ (- & - & +) & \leftrightarrow & & \text{or} & \\ & & & & (- & + & +); \\ & & & & (+ & + & -) \\ (+ & - & -) & \leftrightarrow & & \text{or} & \\ & & & & (- & - & +); \\ & & & & (+ & + & -) \\ (- & + & +) & \leftrightarrow & & \text{or} & \\ & & & & (- & - & +). \end{array} \tag{6}$$

2.6. Lemma. *All the changes of signs listed in* (6) *can be realized.*

Proof. It suffices to check only the case

$$(+\quad +\qquad -)\ \leftrightarrow\ \begin{matrix}(+ & - & \quad -)\\ & \text{or} & \\ (- & + & \quad +).\end{matrix}$$

Let us prove, for example, that the sign sequence $(++-)$ can be transformed into both $(+--)$ and $(-++)$. Suppose that $t_i+t_{i+2}>0$. Then one has $t_i>0$, $t_{i+1}>0$, $t_{i+2}<0$, and $t_i+t_{i+2}>0$. Transition formulas (3) imply $t'_i=\frac{t_{i+1}t_{i+2}}{t_i+t_{i+2}}<0$. In the same way one gets from (3) $t'_{i+1}>0$ and $t'_{i+2}>0$, and thus we get the transition $(++-)\leftrightarrow(-++)$. Since t_i and t_{i+2} have opposite signs, we can deform the initial parameters t_i, t_{i+1}, t_{i+2} (in a nonvanishing way) into $\widetilde{t}_i$, $\widetilde{t}_{i+1}$, $\widetilde{t}_{i+2}$ such that $\widetilde{t}_i+\widetilde{t}_{i+2}<0$. This gives us the second transition $(++-)\leftrightarrow(+--)$.

In the same way one can show that all the other transitions listed in (6) can be realized as well. $\square$

2.7. The graph G^n of reduced decompositions modulo 2-moves. Consider the set G^n of all reduced decompositions of w_0^n modulo 2-moves. Let us present G^n as a graph (which we also denote by G^n). The vertices of G^n are the equivalence classes of reduced decompositions modulo 2-moves. Two vertices are connected by an edge if there exists a pair of representing reduced decompositions such that some 3-move sends one of them to the other one.

Another well-known interpretation of G^n is the set of topologically different arrangements of $n+1$ pseudolines in $\mathbb{R}^2$. The set G^n was studied, e.g., in [OM, pp.247–280] and [Kn, pp.29–40], but to the best of the authors knowledge, even the cardinality of G^n is still unknown for large n.

Observe that if two reduced decompositions σ_1 and σ_2 are equivalent modulo 2-moves, then the corresponding sets $\mathcal{U}_{\sigma_1}$ and $\mathcal{U}_{\sigma_2}$ coincide, by (2). Let us fix an arbitrary representative $\sigma(v)$ in each equivalence class v. Then it follows from Corollary 2.3 that $\sharp_n$ is equal to the number of connected components of $\cup_{v\in G^n}\mathcal{U}_{\sigma(v)}$.

2.8. The "large" graph $\widetilde{G}^n$ as a covering of G^n. Let us now construct a certain covering $\widetilde{G}^n$ of G^n. Namely, a vertex of $\widetilde{G}^n$ is a pair consisting of a vertex v of G^n and a set of $m=n(n-1)/2$ signs (that is, $+$'s or $-$'s) interpreted as values of the variables $\{\varkappa_i\}$ for the decomposition $\sigma(v)$. Thus, the fiber over any vertex of G^n contains exactly 2^m vertices of $\widetilde{G}^n$. Two vertices of $\widetilde{G}^n$ are adjacent if

1) their projections in G^n are adjacent;

2) the corresponding variables $\varkappa_i,\varkappa_{i+1},\varkappa_{i+2}$ and $\varkappa'_i,\varkappa'_{i+1},\varkappa'_{i+2}$ satisfy relations (5) or (6).

Let us denote by $\pi\colon\widetilde{G}^n\to G^n$ the natural projection.

2.9. Theorem (first combinatorial reduction). *The number $\sharp_n$ of connected components of U^n is equal to that of $\widetilde{G}^n$.*

Proof. A vertex $(v,\varkappa)$, $\varkappa=\{\varkappa_1,\dots,\varkappa_m\}$, of $\widetilde{G}^n$ can be identified with the image $\mathcal{U}^{\varkappa}_{\sigma(v)}$ of the set $\mathbb{R}_{\varkappa_1}\times\dots\times\mathbb{R}_{\varkappa_m}$ under the mapping $L_{\sigma(v)}$. By 2.7, $\sharp_n$ is just the number of connected components in the union of the above images.

Suppose that $(v, \varkappa)$ and $(v', \varkappa')$ are adjacent in $\widetilde{G}^n$. Then there exist $\hat{\sigma} \in v$ and $\hat{\sigma}' \in v'$ such that $\hat{\sigma}'$ is obtained from $\hat{\sigma}$ by a 3-move and the corresponding variables $\hat{\varkappa}$ and $\hat{\varkappa}'$ (obtained from $\varkappa$ and $\varkappa'$, respectively, via (4)) satisfy (5) or (6). Similarly to the proof of Lemma 2.6, we see that the intersection of $\mathcal{U}_{\hat{\sigma}}^{\hat{\varkappa}}$ and $\mathcal{U}_{\hat{\sigma}'}^{\hat{\varkappa}'}$ is nonvoid. However, $\mathcal{U}_{\hat{\sigma}}^{\hat{\varkappa}} = \mathcal{U}_{\sigma(v)}^{\varkappa}$ and $\mathcal{U}_{\hat{\sigma}'}^{\hat{\varkappa}'} = \mathcal{U}_{\sigma(v')}^{\varkappa'}$. Thus, $\mathcal{U}_{\sigma(v)}^{\varkappa} \cap \mathcal{U}_{\sigma(v')}^{\varkappa'} \neq \varnothing$, and hence $\mathcal{U}_{\sigma(v)}^{\varkappa}$ and $\mathcal{U}_{\sigma(v')}^{\varkappa'}$ belong to the same connected component of U^n.

Suppose now that $\mathcal{U}_{\sigma(v)}^{\varkappa} \cap \mathcal{U}_{\sigma(v')}^{\varkappa'} \neq \varnothing$. Then, by 2.1, there exists a sequence $\{\sigma_1, \sigma^1, \sigma_2, \sigma^2, \ldots, \sigma_k, \sigma^k\}$ such that $\sigma_1 = \sigma(v)$, $\sigma^k = \sigma(v')$, σ_j and σ^j are equivalent modulo 2-moves, and σ_j is obtained from σ^{j-1} by a 3-move. Denote by v'' the equivalence class of σ_2 modulo 2-moves and fix a generic matrix $\mathcal{M} \in \mathcal{U}_{\sigma(v)}^{\varkappa} \cap \mathcal{U}_{\sigma(v')}^{\varkappa'}$. The matrix $\mathcal{M}$ and relations (4)–(6) define uniquely $\varkappa''$ such that the vertices $(v, \varkappa)$ and $(v'', \varkappa'')$ are adjacent in $\widetilde{G}^n$. Proceeding in the same way, we get a path from $(v, \varkappa)$ to some $(v', \hat{\varkappa}')$ in $\widetilde{G}^n$ such that $\mathcal{M} \in \mathcal{U}_{\sigma(v)}^{\varkappa} \cap \mathcal{U}_{\sigma(v')}^{\hat{\varkappa}'}$. However, the sets $\mathcal{U}_{\sigma(v')}^{\varkappa'}$ and $\mathcal{U}_{\sigma(v')}^{\hat{\varkappa}'}$ for $\varkappa' \neq \hat{\varkappa}'$ are disjoint, and thus $\varkappa' = \hat{\varkappa}'$. Therefore, $(v, \varkappa)$ and $(v', \varkappa')$ lie in the same connected component of $\widetilde{G}^n$. $\square$

The above theorem reduces our initial problem to a purely combinatorial setup. However, since the number of vertices in $\widetilde{G}^n$ equals $2^{n(n-1)/2} \cdot |G^n|$, a direct solution of this combinatorial problem is hardly possible.

§3. Reduction to the fiber of $\pi\colon \widetilde{G}^n \to G^n$.

Theorem 3.2 below reduces our initial problem to the calculation of the number of connected components in a smaller graph Γ^n with "only" $2^{n(n-1)/2}$ vertices.

3.1. Construction of the graph Γ^n. Let us fix the vertex $v_0^n \in G^n$ that corresponds to the equivalence class of the reduced decomposition $s_1 s_2 \ldots s_{n-1} s_2 s_2 \ldots s_{n-2} \ldots s_1 s_2 s_1$.

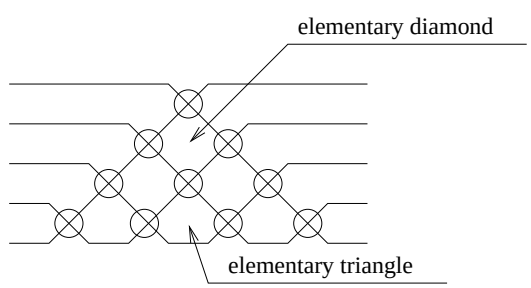

Fig.1. The special vertex v_0^n

We consider v_0^n as an arrangement of n pseudolines (see Fig. 1). The intersection point of two pseudolines is called a *node*; thus, v_0^n has $m = n(n-1)/2$ nodes that lie on $n-1$ *horizontal levels* (the ith level contains $n-i$ nodes). Define the *vertex set of* Γ^n as the set $\{+,-\}^m$ of all the choices of signs at all the nodes of v_0^n. Obviously, this set is one of the fibers of the projection $\pi\colon \widetilde{G}^n \to G^n$, namely, the inverse image of v_0^n.

Let us now define the *edge set of* Γ^n. The faces of the arrangement v_0^n are of two types: triangles and diamonds (see Fig. 1). Let us call them *elementary regions*. Observe

that each elementary region has exactly two *horizontal* nodes (those lying on the same horizontal level). The number of this level is called the *height* of the elementary region.

For any elementary region A we define the involution I_A on the vertex set of Γ^n: I_A reverses the signs at all the nodes of A. An involution I_A is called *admissible* for a vertex $\varkappa \in \Gamma^n$ if the horizontal nodes of A have the opposite signs in $\varkappa$. Two vertices $\varkappa_1$ and $\varkappa_2$ of Γ^n are connected by an edge if and only if there exists an elementary region A such that $\varkappa_1 = I_A(\varkappa_2)$ and I_A is admissible for $\varkappa_1$ (and thus, for $\varkappa_2$).

3.2. Theorem (second combinatorial reduction). *The number of connected components of $\widetilde{G}^n$ is equal to that of Γ^n.*

The proof of this main result of the paper splits up into two major parts and is postponed till the end of this section.

3.3. Proposition. *Let $\varkappa$ and $\varkappa^*$ belong to the same connected component of Γ^n, then $(v_0^n, \varkappa)$ and $(v_0^n, \varkappa^*)$ can be connected by a path in $\widetilde{G}^n$.*

Proof. Without loss of generality one can assume that $\varkappa$ and $\varkappa^*$ are the endpoints of an edge in Γ^n. Below we construct certain paths in $\widetilde{G}^n$ connecting $(v_0^n, \varkappa)$ and $(v_0^n, \varkappa^*)$.

Let A be the elementary region that defines the edge $[\varkappa, \varkappa^*]$. We proceed by induction on its height $h(A)$.

Let $h(A) = 1$, then A is an elementary triangle. Denote the signs of its nodes in $\varkappa$ by $\varkappa_i$, $\varkappa_{i+1}$, $\varkappa_{i+2}$. Since $[\varkappa, \varkappa^*] \in \Gamma^n$, we have $\varkappa_i = \overline{\varkappa}_{i+2}$ (hereinafter $\overline{\varkappa}$ stands for the sign opposite to $\varkappa$). We thus can use the rules (6) twice to get first $\varkappa'_i = \varkappa_i$, $\varkappa'_{i+1} = \overline{\varkappa}_{i+1}$, $\varkappa'_{i+2} = \varkappa_{i+2}$, and then $\varkappa''_i = \overline{\varkappa}'_i = \overline{\varkappa}_i$, $\varkappa''_{i+1} = \varkappa''_{i+1} = \overline{\varkappa}_{i+1}$, $\varkappa''_{i+1} = \overline{\varkappa}'_{i+2} = \overline{\varkappa}_{i+2}$. Hence, the path between $(v_0^n, \varkappa)$ and $(v_0^n, \varkappa^*)$ $\widetilde{G}^n$ in this case consists of two edges (see Fig. 2 for an illustration). Observe that all the nodes involved in the above transitions lie on the two pseudolines containing the left side and the base of A.

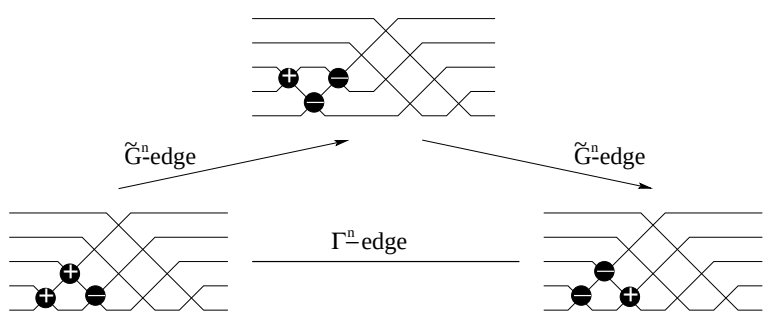

FIG.2. THE SIGN FLIP FOR THE NODES OF AN ELEMENTARY TRIANGLE

Assume now that the assertion holds whenever the height of the elementary region A defining the edge $[\varkappa, \varkappa^*]$ is at most $k-1$; moreover, assume that all the nodes involved in the neccessary transitions lie on the two pseudolines containing the upper left and the lower right sides of A.

Let now $h(A) = k > 1$, and hence A is an elementary diamond. Consider the sequence $\{A_1, \ldots, A_k\}$ of elementary regions defined as follows:

$A_1 = A$;

the upper node of A_i is the leftmost node of A_{i-1}, $2 \leqslant i \leqslant k$;

the rightmost node of A_i is the lower node of A_{i-1}, $2 \leqslant i \leqslant k$.

Evidently, A_k is an elementary triangle. Applying (5) or (6) to the signs of its nodes, we can pass to a neighboring vertex $(v_1^n, \varkappa')$ of $\widetilde{G}^n$ (see Fig. 3).

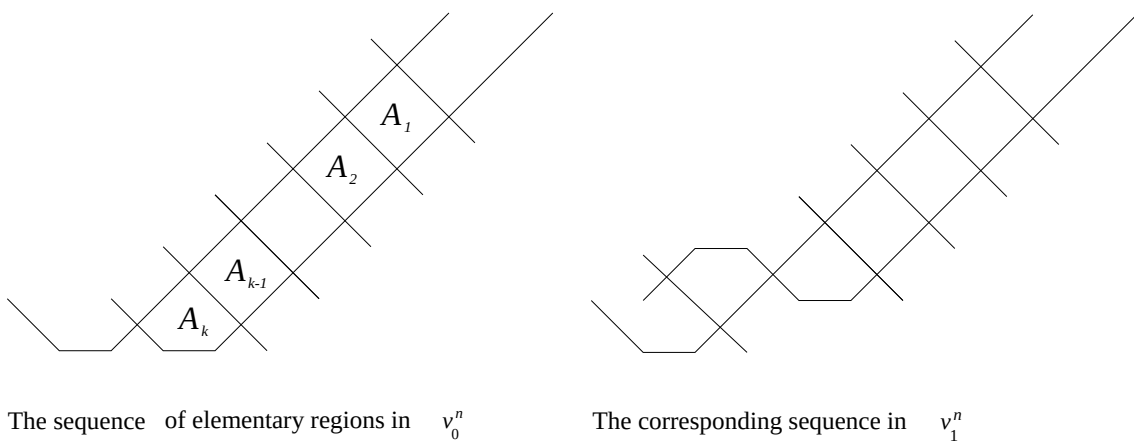

FIG.3. TO THE PROOF OF PROPOSITION 3.3

Let us now delete from the arrangement v_1^n the pseudoline that defines the right side of the triangle A_k in v_0^n. We thus get an arrangement of $n-1$ pseudolines, which is evidently isomorphic to v_0^{n-1}, and a sign distribution $\tilde{\varkappa}'$ on it, which corresponds naturally to $\varkappa'$. However, the height of A in this arrangement equals $k-1$, and thus, there exists a path from $(v_0^{n-1}, \tilde{\varkappa}')$ to $(v_0^{n-1}, \tilde{\varkappa}'')$ in the graph $\widetilde{G}^{n-1}$, where $\tilde{\varkappa}'' = I_A(\tilde{\varkappa}')$ in v_0^{n-1}. Since this path involves only nodes that lie on the two pseudolines defining the upper left and the lower right sides of A, this path is lifted naturally to a path in $\widetilde{G}^n$ that connects $(v_1^n, \varkappa')$ with $(v_1^n, \varkappa'')$ such that $\varkappa'' = \overline{\varkappa}'$ at the nodes of A and $\varkappa'' = \varkappa'$ otherwise. To complete the induction step it suffices to apply in the opposite direction the transition that leads from $(v_0^n, \varkappa)$ to $(v_1^n, \varkappa')$ and to note that the nodes involved in this transition lie on the above described pseudolines (see Fig. 4 for an illustration). $\square$

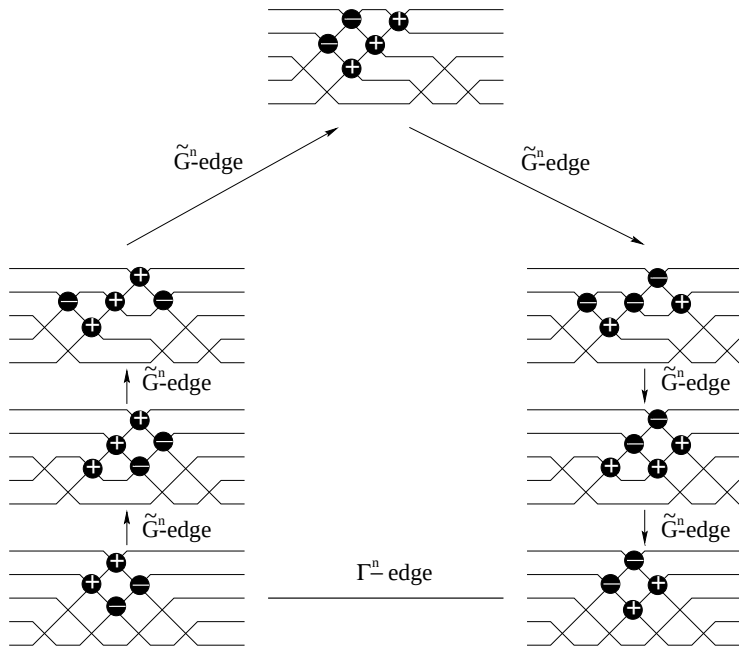

FIG.4. THE SIGN FLIP FOR THE NODES OF AN ELEMENTARY DIAMOND

3.4. Outline of the further strategy. Our goal is to prove the inverse of Proposition 3.3, namely, that if two vertices of Γ^n are the endpoints of a path p in $\widetilde{G}^n$, then they lie in the same connected component of Γ^n (see Proposition 3.16). Consider the projection $\pi(p)$ of such a path p; evidently, it is a closed path in G^n. We next prove the following property of the paths p in $\widetilde{G}^n$ whose projection $\pi(p)$ is a closed path in G^n: for any p satisfying the above condition there exists a sequence of paths in $\widetilde{G}^n$ such that each path in the sequence has a simple structure (canonical lifts and special lifts, see 3.5 and 3.6), and the concatenation of all the paths in the sequence is a path between the endpoints of p (see Lemma 3.7). Therefore, it remains to prove that the inverse of Proposition 3.3 is true for special lifts (Corollary 3.10) and for canonical lifts of closed paths (Corollary 3.15). To obtain the first of these results we establish certain relations between two fibers $\Gamma^n(u)$ and $\Gamma^n(v)$ over adjacent vertices u and v of G^n (see 3.8 and Lemma 3.9). To get the second one, we find a basis of the space of closed paths in G^n (see 3.11 and Lemma 3.14) and prove the corresponding statement for all the elements of the basis (see Lemmas 3.12 and 3.13).

3.5. Canonical lifts. Consider an arbitrary edge $e = [u^1, u^2]$ in G^n and an arbitrary vertex $\tilde{u}^1 = (u^1, \varkappa^1) \in \pi^{-1}(u^1)$ of $\widetilde{G}^n$. The sign transition defined by the 3-move e is governed either by (5), or by (6). In the first case, there exists a unique vertex $\tilde{u}^2 = (u^2, \varkappa^2) \in \pi^{-1}(u^2)$ such that $[\tilde{u}^1, \tilde{u}^2]$ is an edge of $\widetilde{G}^n$. We then say that $[\tilde{u}^1, \tilde{u}^2]$ is the *canonical* $\tilde{u}^1$*-lift* of e (see Fig. 5).

In the second case, there exist two vertices $\tilde{u}^2, \tilde{v}^2 \in \pi^{-1}(u^2)$ such that both $[\tilde{u}^1, \tilde{u}^2]$ and $[\tilde{u}^1, \tilde{v}^2]$ are edges in $\widetilde{G}^n$; besides, there exists also $\tilde{v}^1 \in \pi^{-1}(u^1)$ such that both $[\tilde{v}^1, \tilde{u}^2]$ and $[\tilde{v}^1, \tilde{v}^2]$ are edges in $\widetilde{G}^n$. In this case, the canonical $\tilde{u}^1$-lift of e is the edge that preserves

the middle element $\varkappa_{i+1}$ of the corresponding triple at $\tilde{u}^1 = (u^1, \varkappa^1)$ (see (6)). Observe that in this case the canonical $\tilde{v}^1$-lift of e is the only edge among $[\tilde{v}^1, \tilde{u}^2]$ and $[\tilde{v}^1, \tilde{v}^2]$ that does not touch the canonical $\tilde{u}^1$-lift of e. The canonical $\tilde{u}^1$- and $\tilde{v}^1$-lifts of e are called *twins* (see Fig. 5).

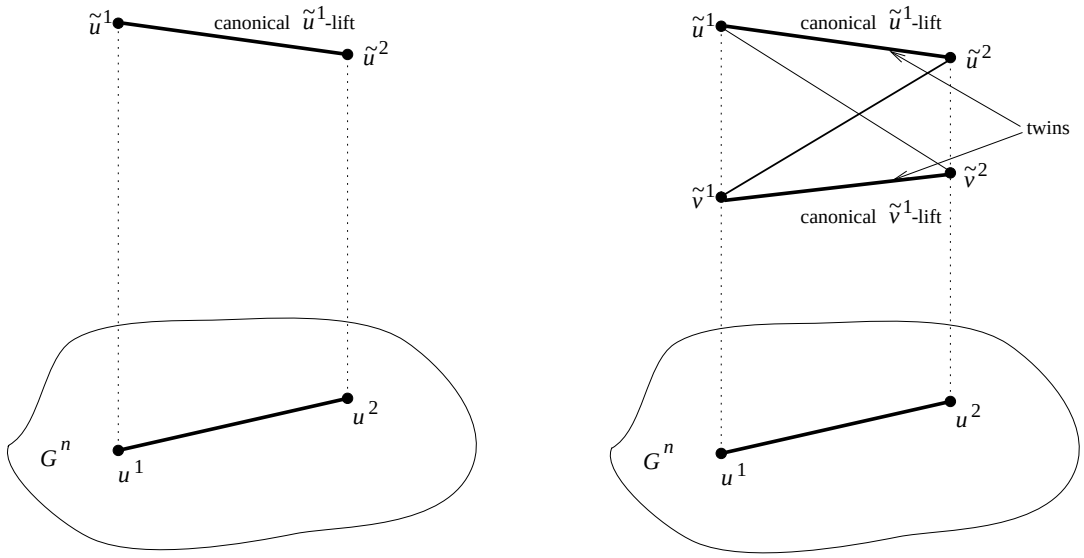

The first case: uniquely defined signs in the fiber above u^2

The second case: two possibilities for the signs in the fiber above u^2

FIG.5. CANONICAL LIFTS AND TWINS

In any case, if $[\tilde{u}^1, \tilde{u}^2]$ is a canonical lift of e, we write $\tilde{u}_2 = c_e(\tilde{u}_1)$ and $\varkappa_2 = c_e(\varkappa_1)$. We deliberately drop the subscript if there is no ambiguity in identifying the edge in question.

Let γ be a path in G^n. A path $\tilde{\gamma}$ in $\widetilde{G}^n$ is said to be a canonical lift of γ if all the edges of $\tilde{\gamma}$ are canonical lifts of edges of γ. Evidently, each path γ in G^n has a canonical lift, which depends on the choice of the initial vertex in $\widetilde{G}^n$. If we fix such a vertex, then the canonical lift of γ is defined uniquely.

3.6. Special lifts. Consider a path γ in G^n such that some canonical lift $\tilde{e} = [\tilde{u}, \tilde{v}]$ of its last edge has the twin $\tilde{e}' = [\tilde{u}', \tilde{v}']$. Let $\tilde{\gamma}$ and $\tilde{\gamma}'$ be the canonical lifts of γ containing $\tilde{e}$ and $\tilde{e}'$, respectively. We replace the edge $\tilde{e}'$ by the edge $[\tilde{u}, \tilde{v}']$ and get a noncanonical lift $\hat{\gamma}^2$ of the closed path γ^2 in G^n obtained by traversing γ twice in the opposite directions. The path $\hat{\gamma}^2$ is said to be a *special lift* of γ^2 (see Fig. 6). Observe that the number of edges in a special lift is always even.

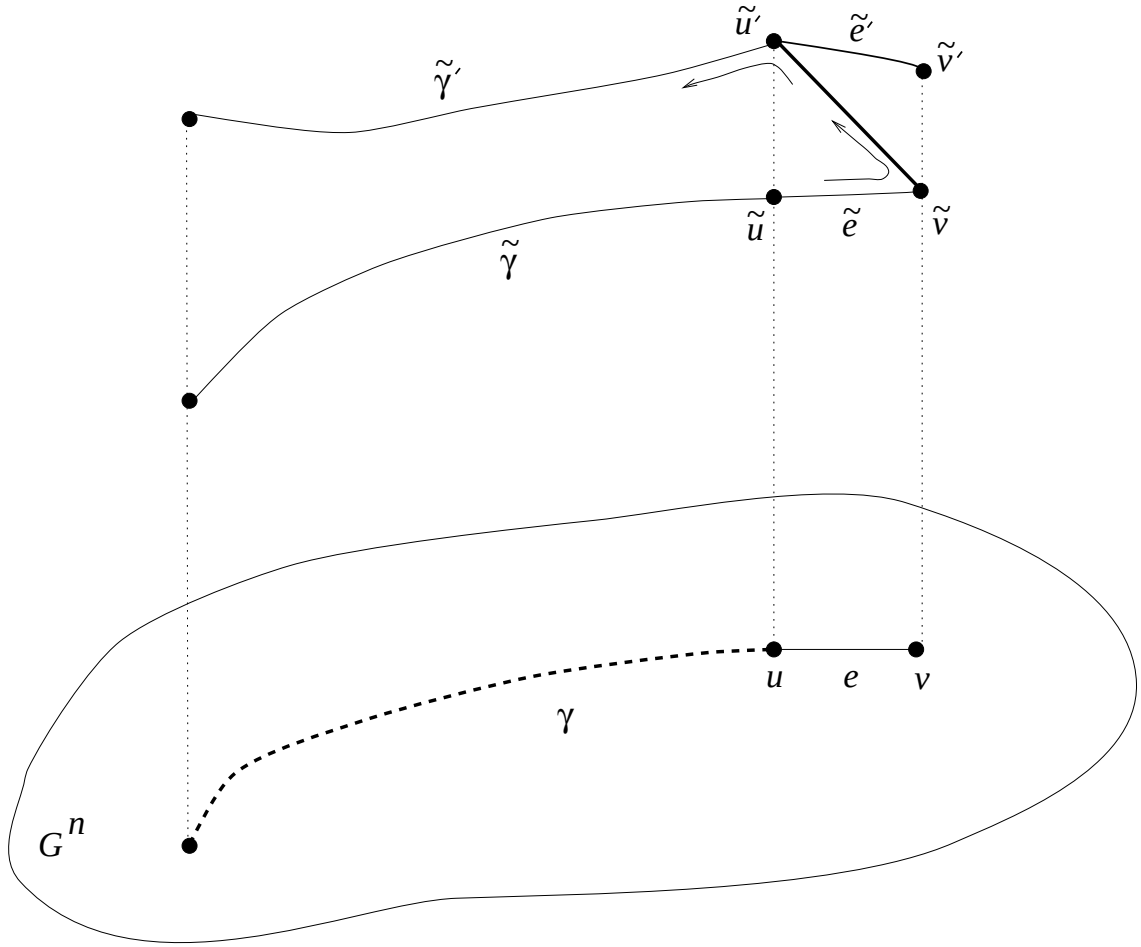

FIG.6. THE SPECIAL LIFT OF γ^2

3.7. Lemma. *For any lift $\bar{\gamma}$ of a closed path γ in G^n there exists a sequence $\bar{\gamma}_1, \dots, \bar{\gamma}_k$ of paths in $\widetilde{G}^n$ such that $\bar{\gamma}_k$ is a canonical lift of γ, all the other paths in the sequence are special lifts, and the concatenation of $\bar{\gamma}_1, \dots, \bar{\gamma}_k$ is a path between the endpoints of $\bar{\gamma}$.*

Proof. Indeed, let us use the following procedure. Go along $\bar{\gamma}$ until the first noncanonical edge occurs, then return back using canonical edges only; we thus get a special lift. Then traverse the second half of the previous path in the opposite direction and continue along $\bar{\gamma}$ until the next noncanonical edge occurs. Return back using canonical edges only, and so on. The very last path in this sequence is a the canonical lift of γ. $\square$

3.8. Graphs $\Gamma^n(u)$. Instead of v_0^n, one can start the construction procedure at any vertex u of G^n, i.e., at any other arrangement of pseudolines. In this case the vertex set of $\Gamma^n(u)$ is defined as the preimage $\pi^{-1}(u)$. Obviously, the pseudolines divide the plane into a disjoint union of elementary regions (triangles and diamonds in the case of v_0^n). Each elementary region has exactly two horizontal nodes, and one can define edges of $\Gamma^n(u)$ by exactly the same rule as above, with the help of admissible involutions.

Let u and v be two adjacent vertices of G^n. The edge $[u, v]$ corresponds to a 3-move that produces the "perestroika" of the pseudoline arrangment u defined by some elementary triangle A, see Fig. 7.

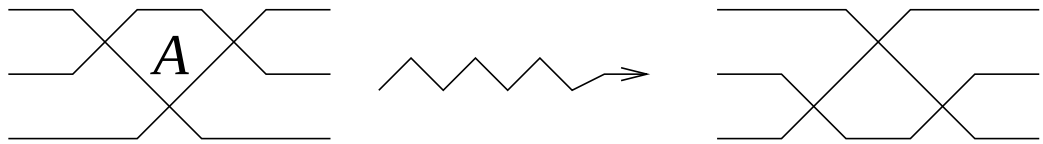

FIG.7. PERESTROIKA OF DIAGRAMS CORRESPONDING TO A 3-MOVE

We say that A is the *e-core* of u. Observe that there exists a natural one-to-one correspondence between the elementary regions of u and v, which takes the e-core of u to that of v; we denote this correspondence by $\hat{c}_e$ (as above, we drop the subscipt when e is identified unambigously).

3.9. Lemma. *Let $e = [u, v]$ be an edge of G^n, $(u, \varkappa) \in \pi^{-1}(u)$ be a vertex of $\widetilde{G}^n$, A be the e-core of u, and B be an elementary region of u such that I_B is admissible for $\varkappa$. Then exactly one of the following possibilities holds*:

either $I_{\hat{c}(B)}$ is admissible for $c(\varkappa)$ and $c(I_B(\varkappa)) = I_{\hat{c}(B)}(c(\varkappa))$;

or $I_{\hat{c}(B)}$ is admissible for $c(\varkappa)$, $I_{\hat{c}(A)}$ is admissible for $I_{\hat{c}(B)}(c(\varkappa))$, and $c(I_B(\varkappa)) = I_{\hat{c}(A)} \circ I_{\hat{c}(B)}(c(\varkappa))$;

else $I_{\hat{c}(A)}$ is admissible for $c(\varkappa)$, $I_{\hat{c}(B)}$ is admissible for $I_{\hat{c}(A)}(c(\varkappa))$, and $c(I_B(\varkappa)) = I_{\hat{c}(B)} \circ I_{\hat{c}(A)}(c(\varkappa))$.

Proof. If A and B are not neighbors, then the first of the above possibilities is apparently true.

All cases of neighboring A and B (up to obvious symmetries) are considered in the following series of pictures. Abusing notation we omit c and $\hat{c}$ to make figures more clear.

1. Equilateral triangle (all the nodes of A have the same sign).

Below we present all possible basic cases.

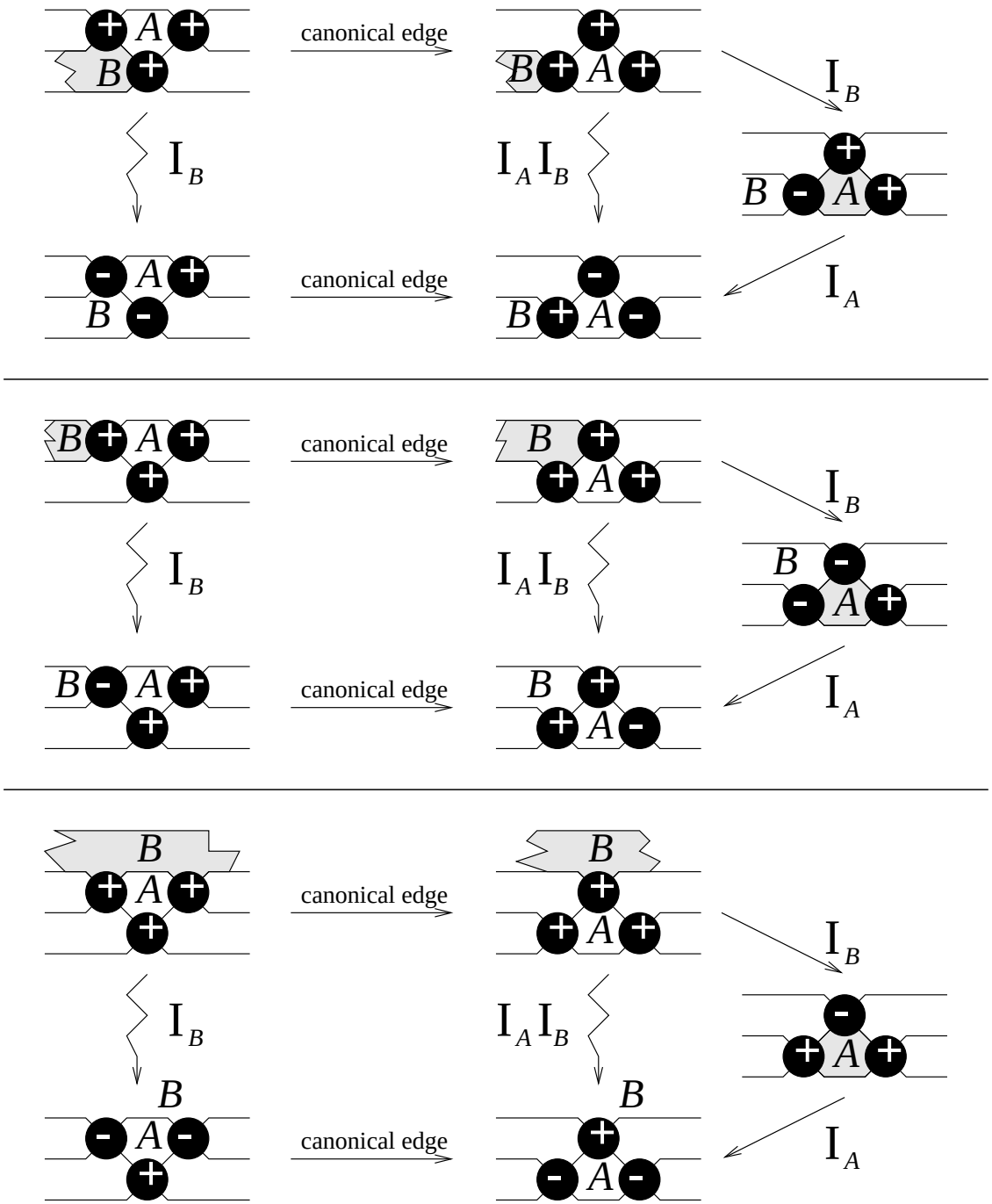

FIG.8. EQUILATERAL CASE

All other possible choices of signs and positions of B are symmetric (obtained by the global sign change and/or symmetry w.r.t. the vertical axis) to the ones considered.

2. Isosceles triangle (base nodes of A have the same sign).

Below we present all possible basic cases.

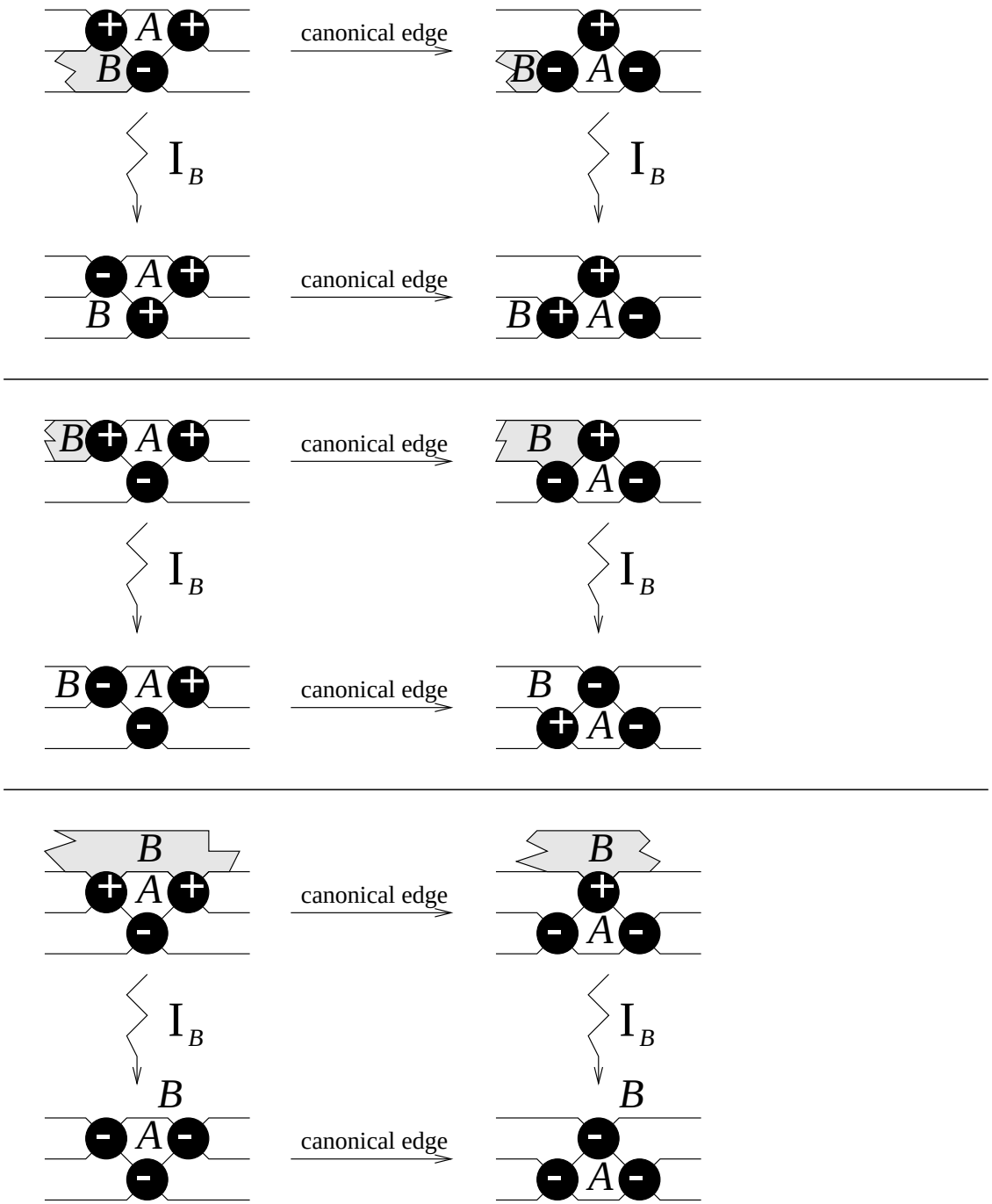

Fig.9. Isosceles case

All other possible choices of signs and positions of B are symmetric to the ones considered.

3. Scalene triangle (base nodes of A have different signs).

Below we present all possible basic cases.

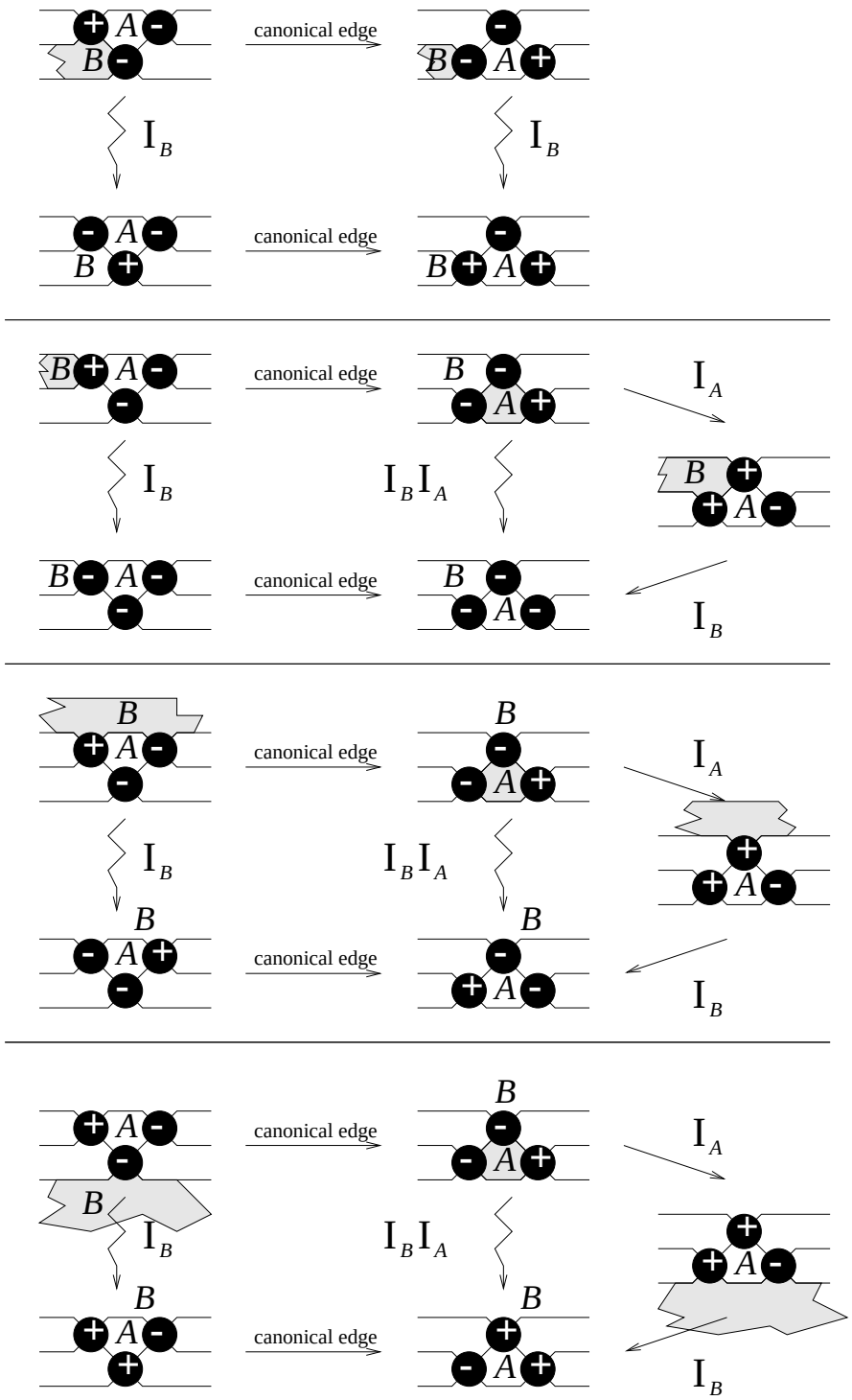

FIG.10. SCALENE CASE

All other possible choices of signs and positions of β are symmetric to the ones considered.

These series of pictures prove the lemma. $\square$

3.10. Corollary. *The endpoints of a special lift lying in a fiber $\pi^{-1}(u)$ for some $u \in G^n$ belong to the same connected component of $\Gamma^n(u)$.*

Proof. We prove the statement by induction on l, where l is the half-length of the special lift $\tilde{\gamma}$ in question.

Let $l = 1$, then $\tilde{\gamma}$ is a special lift of some edge e and coincides (up to obvious symmetries) with the path $\{a, b\}$ shown on Fig. 11. The existence of the $\Gamma^n(u)$-edge c shown by the curved arrow proves the base of induction.

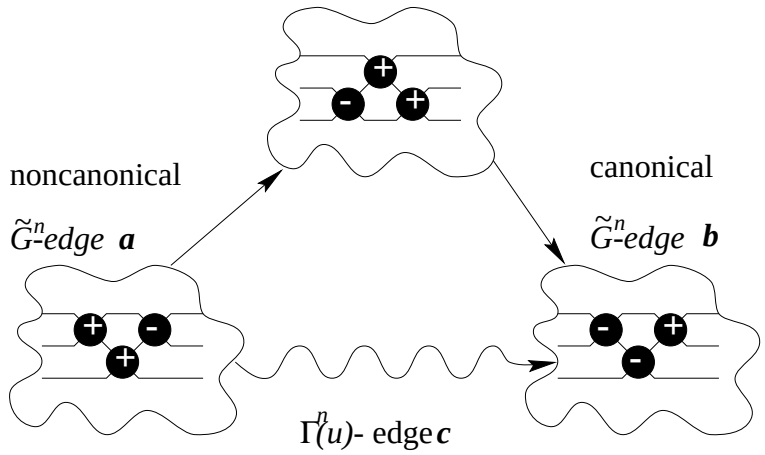

FIG.11. EXAMPLE OF A SPECIAL LIFT OF LENGTH 2

Suppose now that the statement holds for $l \leqslant K$. Let us prove it for $l = K + 1$. Consider a path $\gamma = (u = u_0, u_1, \ldots, u_K, u_{K+1}, u_K, \ldots, u_1, u_0)$ in G^n of length $2(K + 1)$ and take its arbitrary special lift $\tilde{\gamma}$ in $\tilde{G}$. Let $\tilde{u}_0$ and $\tilde{u}'_0$ be the endpoints of $\tilde{\gamma}$, $\tilde{u}_1 = c_e(\tilde{u}_0)$, $\tilde{u}'_1 = c_e(\tilde{u}'_0)$, where $e = [u_0, u_1]$. Then $\tilde{u}_1$ and $\tilde{u}'_1$ are the endpoints of a special lift of length $2K$, and thus they belong to the same connected component of $\Gamma^n(u_1)$. Now, by Lemma 3.9, $\tilde{u}_0$ and $\tilde{u}'_0$ belong to the same connected component of $\Gamma^n(u)$. $\square$

3.11. The following two types of cycles in G^n are called the 4-*cycle* and the 8-*cycle*, respectively, see Figs. 12,13.

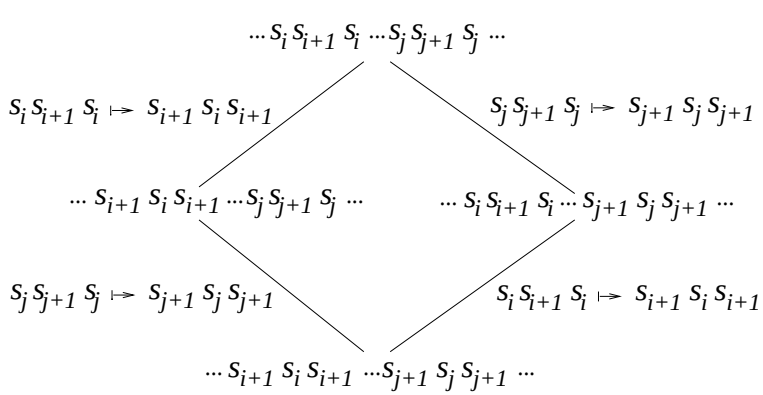

Fig.12. A 4-cycle (commutativity of separated transpositions)

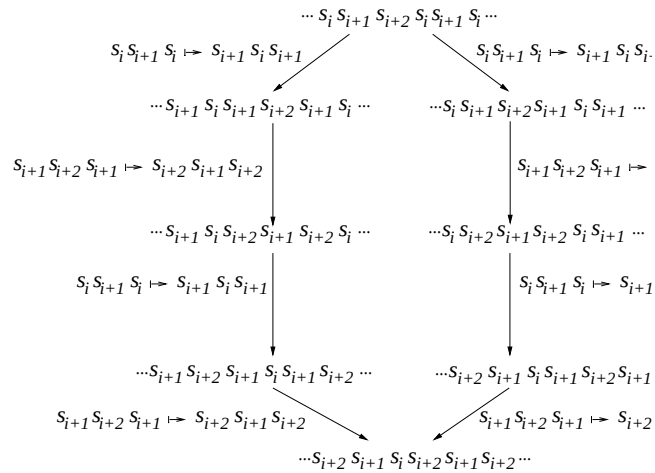

Fig.13. An 8-cycle (Frenkel-Moore equation)

3.12. Lemma. *Any canonical lift of a 4-cycle in G^n is a cycle in $\widetilde{G}^n$.*

Proof. Follows from the commutativity property for 4-cycles in G^n: the resulting sign transition for two consecutive nonintersecting triples $\varkappa_i, \varkappa_{i+1}, \varkappa_{i+2}$ and $\varkappa_k, \varkappa_{k+1}, \varkappa_{k+2}$ does not depend on their order $\square$

For 8-cycles, the situation is more complicated: a canonical lift of an 8-cycle in G^n is not necessarily a cycle in $\widetilde{G}^n$. However, the following statement holds.

3.13. Lemma. *The endpoints of a canonical lift of an 8-cycle (considered as a loop at $u \in G^n$) belong to the same connected component of $\Gamma^n(u)$.*

Proof. One can prove this fact by a direct check of all the possibilities occuring for diagrams with 4 pseudolines. The authors have also written a program in Mathematica that calculates the signs in the final diagram for all possible sets of signs in the initial digram and checks if these vertices are connected in $\Gamma^n(u)$. $\square$

3.14. Lemma. *The set of all 4- and 8-cycles in G^n form a system of generators for the first homology group $H_1(G^n, \mathbb{Z}_2)$.*

Proof. Let us introduce the rank of a reduced decomposition as follows: $\rho(s_{i_1} s_{i_2} \ldots s_{i_k}) = i_1 + i_2 + \cdots + i_k$. Obviously, the rank does not change under 2-moves, thus it is well-defined for vertices of G^n. Any 3-move changes the rank of a vertex exactly by 1.

Let γ be an arbitrary cycle in G^n, and denote by $\rho(\gamma)$ the maximum of the ranks of the vertices in γ. We prove by induction on $\rho(\gamma)$ that γ is homologous to a sum of 4- and 8-cycles. The base of induction is trivial. Assume now that the statement holds for the cycles with the rank less than r, and fails for cycles of rank r. Let γ be a counterexample with the minimal number of vertices of rank r. Consider an arbitrary vertex $v \in \gamma$ such that $\rho(\gamma) = r$, and its neighbours v' and v'' in γ. The edges $[v, v']$ and $[v, v'']$ correspond

to 3-moves, each involving a triple of simple transpositions. We distinguish the following three cases.

1. These triples coincide. Then $v' = v''$, and thus γ is homologous to a cycle γ^* such that either $\rho(\gamma^*) = r - 1$, or $\rho(\gamma^*) = r$ and the number of vertices of rank r in γ^* is less than that in γ, a contradiction.

2. These triples are disjoint. Then there exists a vertex v^* of G^n such that (v^*, v', v, v'', v^*) from a 4-cycle γ_4; observe that $\rho(v^*) = r - 2$. Let $\gamma^* = \gamma + \gamma_4$, then either $\rho(\gamma^*) = r - 1$, or $\rho(\gamma^*) = r$ and the number of vertices of rank r in γ^* is less than that in γ. Since $\gamma = \gamma^* + \gamma_4$, we thus see that γ is not a counterexample.

3. These triples intersect, but not coincide. Then there exists an 8-cycle γ_8 containing the edges $[v, v']$ and $[v, v'']$ such that the ranks of all its vertices excluding v are less than r. We then take $\gamma^* = \gamma + \gamma_8$ and proceed as in the previous case. $\square$

3.15. Corollary. *The endpoints of a canonical lift of any closed path in G^n (considered as a loop at $u \in G^n$) belong to the same connected component of $\Gamma^n(u)$.*

Proof. Follows from Lemmas 3.9 and 3.12-3.14. $\square$

3.16. Proposition. *If the endpoints of a path in $\widetilde{G}^n$ belong to Γ^n, then they lie in the same connected component of Γ^n.*

Proof. Follows from Lemma 3.7 and Corollaries 3.10 and 3.15. $\square$

3.17. *Proof of Theorem* 3.2. Follows directly from Propositions 3.3 and 3.16. $\square$

3.18. $\mathfrak{G}_{n-1}$-action. In order to interpret the obtained results as the $\mathbb{F}_2$-linear action described in the introduction, we proceed as follows. The nodes of v_0^n form the uppertriangular shape (rotate Fig. 1 by $\frac{\pi}{2}$). Each vertex of Γ^n corresponds uniquely to an uppertriangular $(n-1) \times (n-1)$-matrix with $\mathbb{F}_2$-values (by convention, $+$ corresponds to 1 and $-$ to 0.) The action of the operators I_A in terms of $\mathbb{F}_2$-matrices is exactly the action of $\mathfrak{G}_{n-1}$ presented in the introduction. Namely, if a matrix in $N^{n-1}(\mathbb{F}_2)$ has a dense 2×2-submatrix of one the following two forms:

$$\begin{pmatrix} 1 & * \\ * & 0 \end{pmatrix} \text{ or } \begin{pmatrix} 0 & * \\ * & 1 \end{pmatrix},$$

then the corresponding operator I_A changes each entry in this submatrix to the opposite one. If a submatrix is of the form

$$\begin{pmatrix} 0 & * \\ * & 0 \end{pmatrix} \text{ or } \begin{pmatrix} 1 & * \\ * & 1 \end{pmatrix},$$

then I_A acts identically. In both cases the action of I_A is just an addition of the trace of the submatrix to each entry. This gives exactly the action of $\mathfrak{G}_{n-1}$.

§4. Final remarks.

4.1. In this paper we have reduced the question on the number of connected components in the intersection of two open opposite Schubert cell in $SL_n(\mathbb{R})/B$ to the calculation of the number of orbits of $\mathfrak{G}_{n-1}$-action on the $\mathbb{F}_2$-linear space $N^{n-1}(\mathbb{F}_2)$, see Introduction.

Let us list some relatively obvious properties of $\mathfrak{G}_n$.

a) All generators g_{ij} of $\mathfrak{G}_n$ are involutions and belong to the same conjugacy class.

b) Let us construct the following planar graph with the vertex set $\{g_{ij}\}$, $1 \leqslant i \leqslant j \leq n-1$. We connect by edges all pairs of the form $(g_{ij}, g_{i+1,j})$, $(g_{ij}, g_{i,j+1})$ and $(g_{ij}, g_{i+1.j+1})$, i.e., we arrange the generators g_{ij} into an equilateral triangle and place them on the hexagonal lattice in $\mathbb{R}^2$ with edges joining the neighboring vertices of the lattice. Then

(i) any distant (i.e., not joined by an edge) generators commute;

(ii) any 2 generators a and b joined by an edge satisfy $(ab)^3 = 1$;

(iii) any 3 generators a, b, c pairwise joined by edges generate the group S_4.

c) The group $\mathfrak{G}_n$ has a natural $\mathbb{F}_2$-linear representation on the space $N^{n-1}(\mathbb{F}_2)$. Indeed, consider the linear map $\pi\colon N^n(\mathbb{F}_2) \to N^{n-1}(\mathbb{F}_2)$ such that the (i,j)th entry in the image equals the sum of the (i,j)th and $(i+1,j+1)$th entries in the inverse image. Since $\ker \pi$ is invariant under the action of $\mathfrak{G}_n$ on $N^n(\mathbb{F}_2)$, one obtains the induced action of $\mathfrak{G}_n$ on $N^{n-1}(\mathbb{F}_2)$. It is easy to see that g_{ij} acts by adding the (i,j)th entry of the matrix to all its neighbors in the hexagonal lattice.

d) There exists a scew-symmetric bilinear form Φ on $N^{n-1}(\mathbb{F}_2)$ of corank $\left[\frac{n-1}{2}\right]$ that is preserved under the conjugate to the above $\mathfrak{G}_n$-action on $N^{n-1}(\mathbb{F}_2)$.

Note that a similar situation was already studied earlier in connection with the monodromy theory for isolated singularities, see [J1],[J2],[C],[W].

Although we do not have a complete group-theoretical description of $\mathfrak{G}_n$, we propose the following conjecture about its orbits in $N^n(\mathbb{F}_2)$.

Conjecture. *The $\mathfrak{G}_n$-action on $N^n(\mathbb{F}_2)$, $n \geqslant 5$, have the following orbits*:
for $n = 2k$:
2^{2k} *orbits of length* 1,
$2^{k+2}(2^{k-1}-1)$ *orbits of length* $2^{(2k+1)(k-1)}$,
2^k *orbits of length* $2^{(k+1)(k-1)}(2^{k(k-1)}-1)$,
2^k *orbits of length* $2^{(k+1)(k-1)}(2^{k(k-1)}+1)$,
2^{k+1} *orbits of length* $2^{k-1}(2^{2k(k-1)}-1)$;
for $n = 2k+1$:
2^{2k+1} *orbits of length* 1,
$2^{k+2}(2^k-1)$ *orbits of length* $2^{(2k-1)(k+1)}$,
2^{k+1} *orbits of length* $2^{k^2+k-1}(2^{k^2}-1)$,
2^{k+1} *orbits of length* $2^k(2^{k^2}-1)(2^{k^2-1}+1)$.

As an immediate corollary we get the proof of the main conjecture stated in the introduction.

4.2. The case of nonopposite flags f and g. It is well known that the orbits of the SL_n-action on the space of pairs of flags are parametrized by permutations. One thus can ask for finding the number of connected components in the intersection $U^n_{f,g}$ of open Schubert cells w.r.t. flags f and g provided the flags f and g are in relative position $w \in S_n$. In the particular case $w = (n\ n-1\ \ldots 1)$ we get our initial problem concerning opposite cells.

We define an *affine pseudoline arrangement* similar to usual pseudoline arrangement with the only distinction: we allow parallel pseudolines (that is, intersecting at infinity).

Compact connected components of the complement of an affine pseudoline arrangement we call *elementary regions*.

Given a permutation w, let us consider any affine pseudoline arrangement $\mathfrak{P}$ realizing w in the obvious way, cf. [BFZ]. Let R denote the set of intersection points in $\mathfrak{P}$, W be the $\mathbb{F}_2$-vector space with the basis R, and $V = W^*$. For each elementary region a we define a linear operator $g_a \colon V \to V$ in the following way. Each elementary region has exactly 2 "horizontal" boundary vertices. Let $p_1, p_2, \ldots, p_q$ be boundary vertices of a and p_1, p_2 be "horizontal". For any intersection point $p \in R$ we denote by $\psi_p \in V$ the characteristic function of the point p. Put

$$g_a(f) = f + (f(p_1) + f(p_2))(\psi_{p_1} + \psi_{p_2} + \cdots + \psi_{p_q}).$$

Denote by $\mathfrak{G}(w, \mathfrak{P})$ the subgroup of $GL(V)$ generated by all g_a. The following statement would be a generalization of the main result of this paper.

Conjecture. *The number of connected components in $U^n_{f,g}$ is equal to the number of orbits of $\mathfrak{G}(w, \mathfrak{P})$-action in V.*

References

[A] V. Arnold, *Ten problems*, Adv. Sov. Math. **1** (1990), 1–8.

[BFZ] A. Berenstein, S. Fomin, and A. Zelevinski, *Parametrizations of canonical bases and totally positive matrices*, Adv. Math. **122** (1996), 49–149.

[C] S. V. Chmutov, *Monodromy groups of critical points of functions*, Invent. Math. **67** (1982), 123–131.

[J1] W. A. M. Janssen, *Scew-symmetric vanishing lattices and their monodromy groups*, Math. Ann. **266** (1983), 115-133.

[J2] W. A. M. Janssen, *Scew-symmetric vanishing lattices and their monodromy groups, II*, Math. Ann. **272** (1985), 17-22.

[K] D. Knuth, *Axioms and Hulls*, Springer-Verlag, 1992.

[L] G. Lusztig, *Total positivity in reductive groups*, Lie Theory and Geometry: in honor of Bertram Kostant, Birkhäuser, 1994.

[OM] A. Bjorner, M. Las Vergnas, B. Sturmfels, N. White, and G. Ziegler, *Oriented Matroids*, Cambridge University Press, 1993.

[R] K. Rietsch, *The intersection of opposed big cells in real flag varieties*, submitted to Proc. Royal Math. Soc.

[S] M. Shapiro,, *Nonoscillating ODE*, Ph.D. thesis, Moscow State University (1992).

[SS] B. Shapiro and M. Shapiro, *On the totally positive upper triangular matrices*, Lin. Alg. and Appl **273** (1996), 23-29.

[SSV1] B. Shapiro, M. Shapiro, and A. Vainshtein, *Topology of intersections of Schubert cells and Hecke algebra*, Discr. Math. **153** (1996), 305–318.

[SSV2] B. Shapiro, M. Shapiro, and A. Vainshtein, *On combinatorics and topology of pairwise intersections of Schubert cells in SL_n/B*, Arnold-Gelfand Mathematical Seminars: Geometry and Singularity Theory, Birkhäuser, 1996.

[SV] B. Shapiro and A. Vainshtein, *Euler characteristics for links of Schubert cells in the space of complete flags*, Adv. Sov. Math. **1** (1990), 273–286.

[W] B. Wajnryb, *On the monodromy group of plane curve singularities*, Math. Ann. **246** (1980), 141–154.